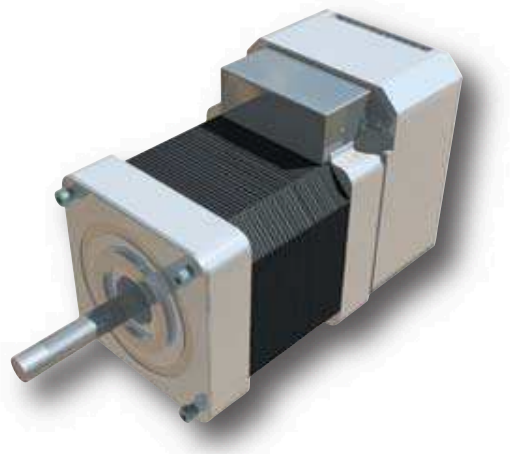

COOL MUSCLE™

INTEGRATED SERVO SYSTEMS

KOLEKTOR Indutec
+420 774 663 721
ondrej.janik@kolektorindutec.com
www.servo-pohony.cz

COOL MUSCLE

COOL MUSCLE™

Integrated Motion Modules

The Cool Muscle line of servo motors provide all the common components required for motion control embedded into the motor itself. The seamless integration of both software and hardware components creates highly efficient motion modules that can be easily integrated into existing designs, or used to shorten the development cycle of your new machine.

The Cool Muscle outperforms traditional servo and stepper systems by virtue of the controller's multiple closed feedback loops with the driver and high resolution encoder. Short wire lengths reduce susceptibility to EMI and noise, while removing servo and encoder cables that often add considerable cost, inventory, and complexity. On-board PLC functionality also reduces machine component count and costs, and allows for modern, elegant machine design. A variety of industrial buses are available for communications and networking with third party host controllers.

Two Series of Cool Muscle Servos

The Cool Muscle line is comprised of two distinct series. The CM1 is a high performance closed loop servo system based on high torque stepper motors, providing a high torque density package for applications such as pick and place, guiding, dispensing, and medical reseach. The CM2 is based on high speed AC servo motors with high wattages and expanded I/O capabilities, suitable for applications requiring higher running speeds or additional torque through gearing. The CM2 provides the additional benefit of having an integrated AC power supply, compatible with most global voltage standards.

Interface Options

P Type

Replacing your current pulse driven system with the P type Cool Muscle will save space, increase cycle time, and remove the problems associated with open loop steppers. The P type interface accepts Step/Direction or Clock Wise/Counter Clock Wise pulse trains from an external controller. Analog speed or position control functions are also available within the P type interface function set.

C Type

The C type Cool Muscle is the most versatile and feature packed solution among the two types. The C type Cool Muscle can be pre-programmed, dynamically controlled by PC or embedded computer and can be networked for multi-axes applications. Digital signals can also activate stored motion programs, creating a compact, powerful machine with simple controls. The C type Cool Muscle can also vary speeds or positions in proportion to voltage input level. Set the max. speeds or travel distances with ease by parameters. The analog functions in the Cool Muscle provides an ideal solution for constant feed systems, and valves.

R Type

The R Type is an extension to the C type feature set, which adds two axes co-ordinated contouring commands. With a network of R Type motors, two dimensional shapes can be created for applications such as dispensing, cutting, or imaging. Additional networked Cool Muscles can be used for linear motion in a third axes and for other handling or setup axes.

COOL MUSCLE

CM1

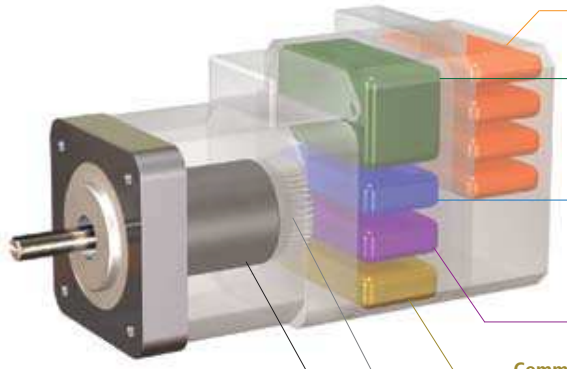

Interface Options: RS-232, RS-485
TCP/IP Ethernet, CANopen

Driver: Closed loop, sinusoidal, vector control

Controller: Real-time OS kernel with
torque, speed, and position control.
2-axes coordinated motion

PLC function: Fixed scanning rate
programmable I/O with PLC like functions
Arithmetic and logic functions

Communication: Two UART ports, daisy chain networkable
Onboard digital and analog I/O

Encoder: Magnetic encoder, 50000ppr

Motor: Brushless multi-pole synchronous motor

CM2

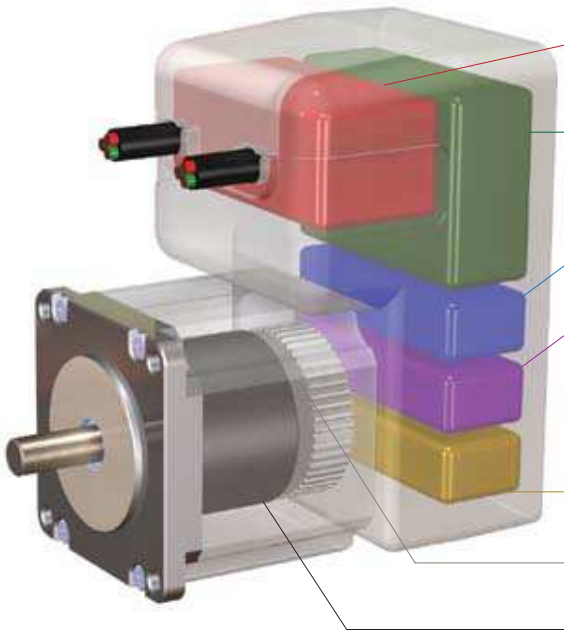

Onboard power supply: Direct AC100V-240V

Driver: Closed-loop sinusoidal vector control
One parameter tuning

Controller: Torque control
Proprietary RT OS
Interpolation functions (option)

PLC function: Arithmetic/Logical operations

Communication: Two RS-232C channels
15 axes daisy chain network

Input/Output (I/O): 6 digital inputs/4 digital
outputs, 1 Analog Input/1 Analog Output

Encoder: Magnetic, 50000ppr

Motor: Brushless AC synchronous motor

COOL MUSCLE™
FEATURES

Flexible & Convenient Power Input

The CM1 series Cool Muscle uses industry standard 24VDC input voltage for all of the motor sizes simplifying your low voltage power bus. The CM2 series Cool Muscle accepts 100-240VAC, single or 3 phase, removing the need for additional high voltage AC-DC power supplies.

Expensive High Voltage Drive cables are no longer required!

Full Closed Loop System

All Cool Muscles are fully closed loop systems. With a high resolution magnetic encoder and the intelligent driver board integrated into a single space efficient package, the Cool Muscle constantly monitors its position, eliminating any missed steps.

Higher repeatability, stability, and accuracy.

Closed Loop System

By monitoring position and current values from built-in sensors the Cool Muscle handles both position and current feedback for optimal positioning and power efficiency.

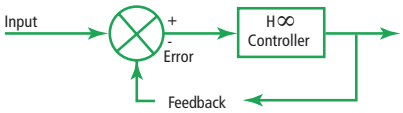

H∞

Using novel modern control technology, the Cool Muscle goes beyond antiquated static PID control by utilizing the robust **H∞** control system. **H∞** responds to dynamic loads across the entire speed range, reduces the need to tune gains, and increases the allowable inertia mismatch between motor and load.

Smooth and Accurate Movements

The Cool Muscle's high resolution magnetic encoder gives you an exceptionally fine resolution of 50,000 units per rotation. All Cool Muscles employ Vector Drive control, resulting in incredibly smooth motion and high torque at low speeds.

Aggressive acceleration ramps not possible with microstepping decrease your machine's cycle time and increase output.

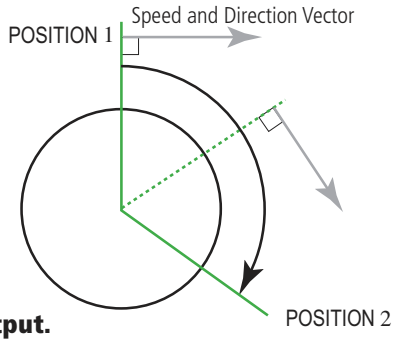

Vector Drive Control

Vector drive uses onboard phase current sensors as feedback in a closed loop current controller. This system optimizes torque in static and dynamic loading conditions, drastically increasing the torque density of the motor system, while micro-managing current for optimum efficiency.

Energy Efficient

The Cool Muscle's power management monitors and provides the optimum current based on load, keeping the motor cool. In addition, using a stepping motor, the CM1 Cool Muscle generates high torque at low speeds in a small space envelope.

Longer motor life. Increased power efficiency with as much as a 75% power savings over other systems. Great for enclosed spaces.

The Cool Muscle applies optimum current to produce motion whereas an open loop stepper typically runs with a fixed current draw.

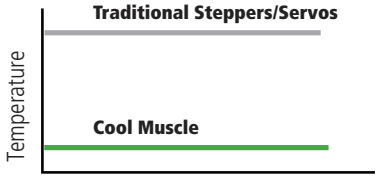

Battery Operation

The CM1 Series Cool Muscle's efficient design technology makes the motor suitable for battery operation.

Contact Myostat Motion Control for further information about operating voltage ranges and current draw.

COOL MUSCLE™ FEATURES

Various Interfaces

The Cool Muscle can be controlled via different interfaces, including Pulse trains, Analog, Computer and PLC I/O. Choose The type that best suits your needs. Ethernet, CAN open and other industrial buses are available for the Cool Muscle as an option.

Minimum modification required to improve your existing design and improve performance.

	Control	Variations
P Type	Pulse train	CW/CCW Step/Direction
C Type	PC Embedded Computer PLC Discrete I/O	Pre-Programmed Dynamic Command
R Type	Analog Input CML commands	Position, Speed 2-axes Contouring

Programmable

Program the Cool Muscle to create the motion you need. Define motion profiles and create programs using easy-to-understand Cool Muscle Language (CML). Motion programs you create can be stored in the Cool Muscle's EEPROM. The programs can be executed via PC, embedded computer or triggered using I/O.

Great solution for repetitive motion. Simple and compact machines.

CML

Cool Muscle Language is a robust set of ASCII commands that lets you easily create motion programs. Commands include conditional, iterative, and mathematical functions.

Logic Banks

Logic bank programming moves beyond motion programming into logic and mathematical functions, running at a fixed scan rate for PLC type functionality.

P1=1000 **P2=2000** **S1=200** **S2=300** **A1=50** **A2=150** **T1=20**	Define motion profiles such as speed, acceleration, position and timer.
B1 **A1,S1,P1** **S2,P2,P1** **C2** **END.1**	Define motion programs using the motion profiles defined above.

Powerful Pre-programmed Functions

The Cool Muscle system comes with over 90 user definable parameters and pre-programmed functions. These remove the need to program typical routines such as Homing, Feeding, Torque based motion, Speed, or Position Control.

Logic Banks are also an excellent way to Program complex I/O interactions

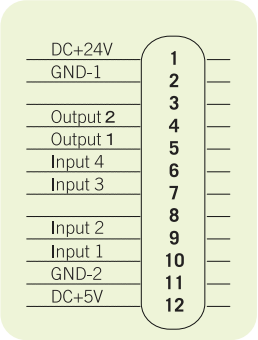

Input Functions examples:
Origin Sensor/Homing
Manual Feed
Manual Jog
Execute Bank
Origin Search
Motor Free
Enable Motor
Execute Next Step
Execute Previous Step

Output Functions examples:
Alarm
In-position
Registration

Logic Programming and PLC Functionality

The Cool Muscle's real time operating system precisely controls I/O timing allowing for PLC style I/O operation.
Logic banks provide a flexible logical and mathematical capability analogous to that offered by traditional ladder logic. User defined actions can be triggered by external inputs or by internal motor conditions such as speed, torque, or position.

Create custom tasks to monitor internal system metrics and variables which execute in parallel with other system operations.

COOL MUSCLE™
FEATURES

Torque Control and Feedback

The Cool Muscle controller uses the integrated current and position sensors to maintain sophisticated torque control during operation. Peak running torque can be easily set within motion programs, or the built in Push Mode function can be quickly implemented to mimic pneumatic cylinder operations.

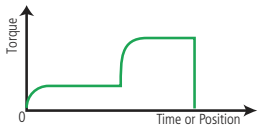

Closing the loop with external load cells is also quick and efficient utilizing the the analog inputs PI gain filter and the pre-set functions built into the Cool Muscle

2-Axes Co-ordinated Motion

Both the CM1 and CM2 R Type servos provide 2 axes contouring utilizing a 2+ motor daisy chain network. Additional linear axes can be implemented on the same motor for applications such as dispensing, cutting, or inspection. Programs can be run directly from the motor without the need for a host controller, or can be streamed from PC for greater flexibility.

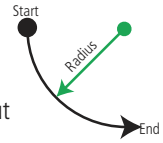

Straight forward adhesive dispensing

DXF/G Code to CML conversation and setup software is available from Myostat Motion Control Inc. This software accelerates development time and simplifies motor programming.

Network Communications

The Cool Muscle offers you multiple networking solutions. Connect multiple Cool Muscles in a daisy chain style network. In the daisy chain network Cool Muscles can tell other motors to activate programs as well as receive commands from a computer or an embed-ded controller.

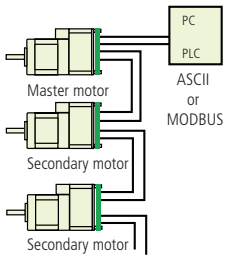

Network options such as CANopen and Ethernet are now available.

CM1 Communications/Network Interface Options

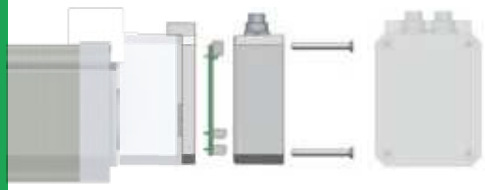

The CANopen option for the the Cool Muscle implements DSP402 on CAN 2.0B, capable of all standard communication rates (10KHz – 1MHz). Cool Muscle specific objects give access to advanced Cool Muscle features while maintaining standard features such as node guarding, heartbeat, SDOs and PDOs.

Industrial Buses

RS-232, RS-485, MODBUS, Ethernet, CANopen, and other industrial interfaces are available as options for the Cool Muscle servo systems. Our engineers provide technical support based on extensive experience integrating the Cool Muscle with third party controllers, HMIs, and PLCs.

Drawings and technical specifications for each interface are avaliable from www.coolmuscle.com or from your local distributor.

By using MODBUS RTU, compliant PLCs can be directly connected to a Cool Muscle serial network, economically extending the system I/O count for demanding applications.

COOL MUSCLE™
Software

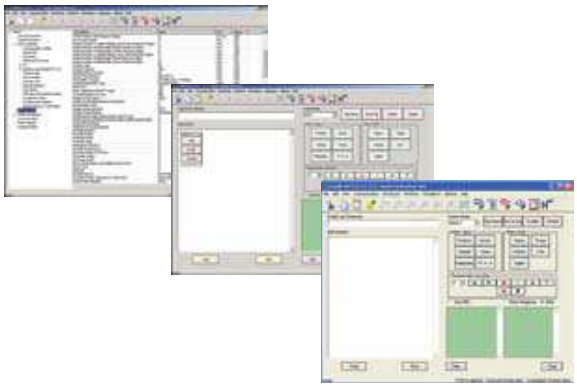

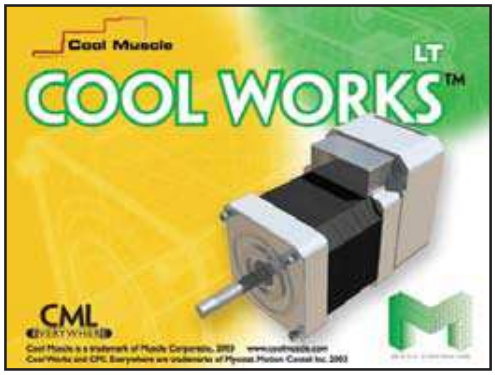

Powerful & Convenient Software

CoolWorks is provided as a graphical user interface to program and tune Cool Muscle servos. Setting and programs can be modifed and saved either to the motor or to your PC. CoolWorks also provides convenient calculators for determining actuator specific requirements. CoolWorks is available for download from www.coolmuscle.com in the software section.

Look to www.coolmuscle.com for other Cool Muscle specific software such as G-code interpreters, teaching pendant applications and ActiveX controls that simplify programming

The Cool Works CM1 H Infinity tuning window can be used to directly estimate your systems' inertia!

Integrated Linear Actuators

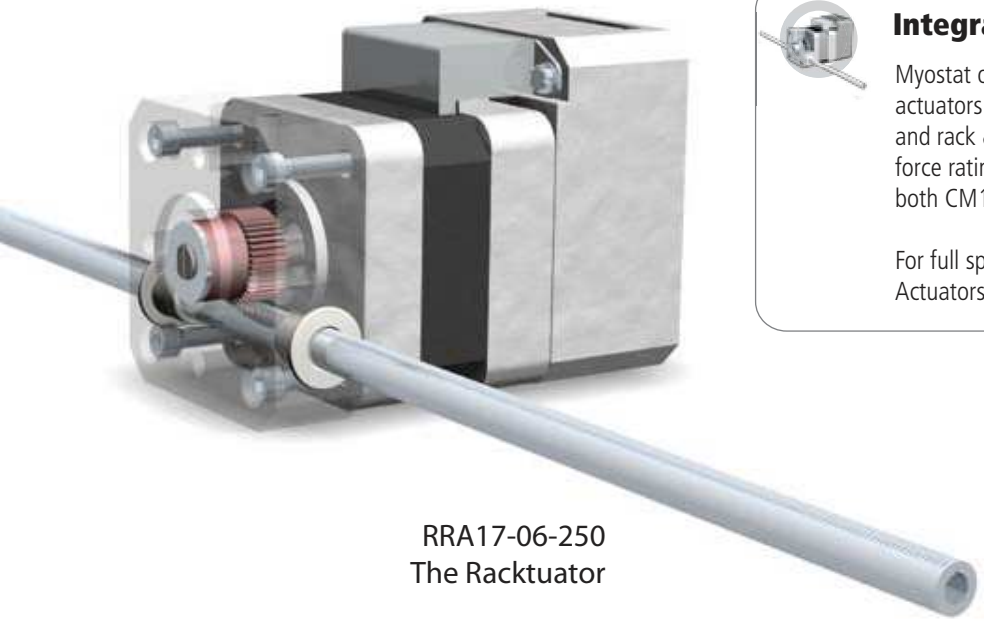

RRA17-06-250
The Racktuator

Integrated Actuators

Myostat offers a wide range of Cool Muscle integrated actuators based on ball screws, lead screws, belt drives, and rack & pinion assemblies. Rod style actuators with force ratings up to 2000LbsF are also bundled with both CM1 and CM2 servo systems.

For full specifications, please review the Integrated Actuators Brochure or look to www.coolmuscle.com

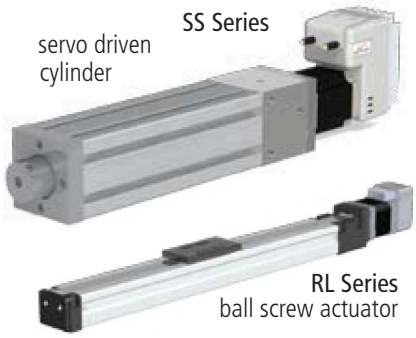

CM1 SPECIFICATIONS

Model Name

CM1 - C - 11L30 - RT3

- CM1 — Generation
- C — Interface: P ... Pulse Type; C ... Computer Type
- 11 — Size: 11, 17, 23
- L — Length: L ... Long; S ... Short
- 30 — Max Speed: 30 ... 3000rpm; 20 ... 2000rpm
- RT3 — Farmware Level: RT3 ... V3 RTOS

Specifications

MODEL	CM1-□-11L30	CM1-□-11S30	CM1-□-17L30	CM1-□-17S30	CM1-□-23L20	CM1-□-23S30
Motor Output Power	18W	9W	18W	18W	30W	45W
Maximum Speed	3000rpm	3000rpm	3000rpm	3000rpm	2000rpm	3000rpm
Continuous Torque Nm(oz.in)	0.055 (7.78)	0.027 (3.8)	0.38 (53.8)	0.082 (11.61)	0.87 (123.2)	0.29 (46.06)
Peak Torque Nm(oz.in)	0.078 (11.1)	0.039 (5.5)	0.54 (76.4)	0.117 (16.56)	1.24 (175.6)	0.46 (65.14)
Load Inertia Allowance g-cm^2 (oz-in-s^2)	180 (2.5 x 10^{-3})	80 (1.1 x 10^{-3})	760 (1.07 x 10^{-2})	380 (5.38 x 10^{-3})	4.6 x 10^3 (6.5 x 10^{-2})	1.4 x 10^3 (1.9 x 10^{-2})
Motor Inertia g-cm^2 (oz-in-s^2)	18 (2.5 x 10^{-4})	8 (1.1 x 10^{-4})	76 (1.07 x 10^{-3})	38 (5.38 x 10^{-4})	4.6 x 10^2 (6.5 x 10^{-3})	1.4 x 10^2 (1.9 x 10^{-3})
Encoder	Incremental magnetic encoder (50,000 pulses per rotation)					
Control Method	Closed loop vector control					
Input Supply Voltage	DC24V±10%					
Input Supply Current Rated (Continuous Torque/Rated Peak Torque)	1.2A/1.5A	0.8A/1.0A	1.2A/1.8A	1.2A/1.8A	2.6A/3.4A	3.9A/5.1A
Resolution Pulse Rotation (Pulse/Rotation)	200, 400, 500, 1000(default), 2000, 2500, 5000, 10000, 25000,50000, Select by parameter					
Environmental Conditions Operating/Storage Temperature	between 0 °C and 40°C/ between -20°C and +60°C					
Operating Humidity	Less than 90% Relative Humidity					
Shock/Vibration	Less than 10G /Less than 1G					

I/O Specifications

SIGNAL	Parameter	MIN.	MAX.	UNIT.
Digital Input 1 & 2	Voltage Range	0	24	Vdc
Photo-coupled	Low Level	0	0.8	Vdc
Sinking/Sourcing	High Level	2.4	24	Vdc
	Operating Current	7	15	mA
	f	-	500	KHz
	Pulse Width	0.8	-	µs
UART 0 & 1 RX/TX	Voltage Range	0	5	Vdc
	Communications Speed	9600	512000	Kbps
Digital Input 3 & 4	Voltage Range	0	5	Vdc
Sourcing	Low Level	0	0.8	Vdc
	High Level	2.4	5	Vdc
	Pulse Width	120	-	µs
Analog Functions (IN4)	Hardware A/D Resolution	-	10	bits
	Software Oversampling	-	13	bits
Output 1 & 2	Maximum Voltage	-	24	Vdc
	Current - see note	-	20	mA
5Vdc Output	Voltage Range	4.5	5	Vdc
	Output Current - see note	-	50 *	mA

*Note: Combined current draw of O1, O2, IN3, IN4 and 5Vdc source should not exceed 200mA. O1 & O2 should not exceed 50mA each.

CM1 DRAWINGS

■ CM1 - □ - 11S30/11L30 DIMENSIONS (UNIT:mm)

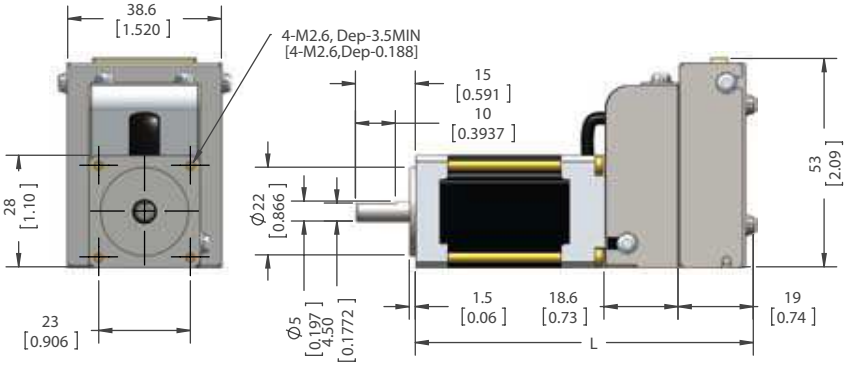

■ Torque Curve

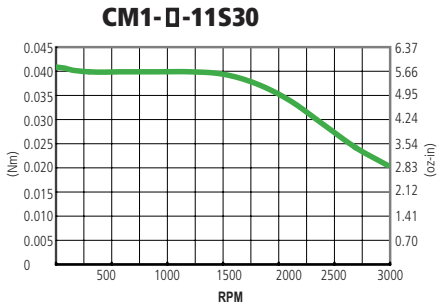

■ Motor Length

MODEL	L
CM-X-11L30	85 ±1
CM-X-11S30	71 ±1

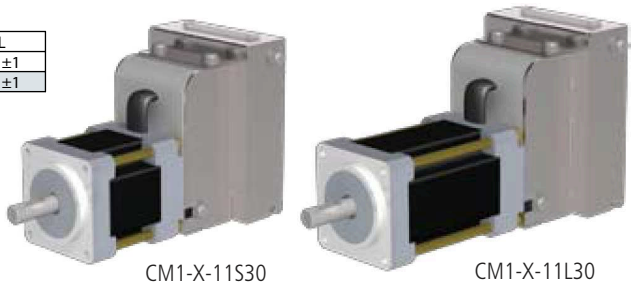
CM1-X-11S30 CM1-X-11L30

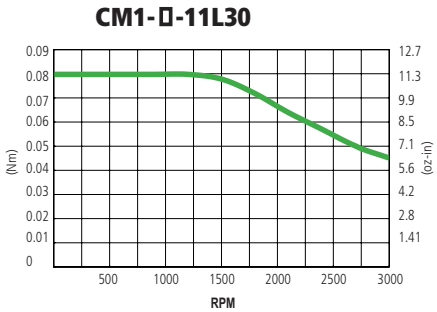

■ CM1 - □ - 17S30/17L30 DIMENSIONS (UNIT:mm)

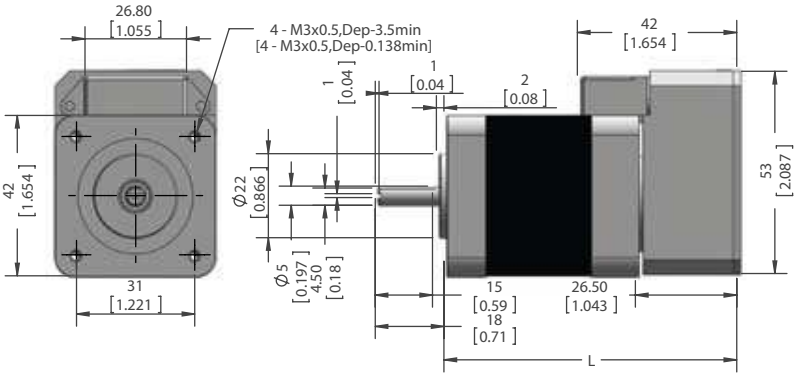

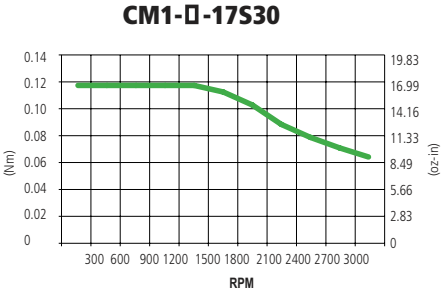

■ Motor Length

MODEL	L
CM-X-17L30	3 inches/76.5mm
CM-X-17S30	2.38 inches/60.5mm

CM1-X-17S30 CM1-X-17L30

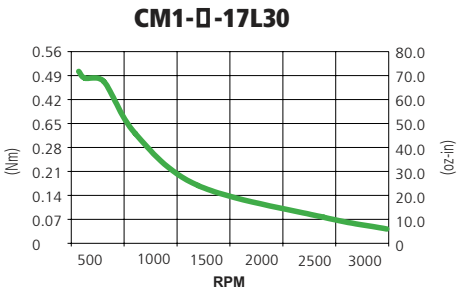

CM1 DRAWINGS

■ CM1 - □ - 23S30/23L20 DIMENSIONS (UNIT:mm)

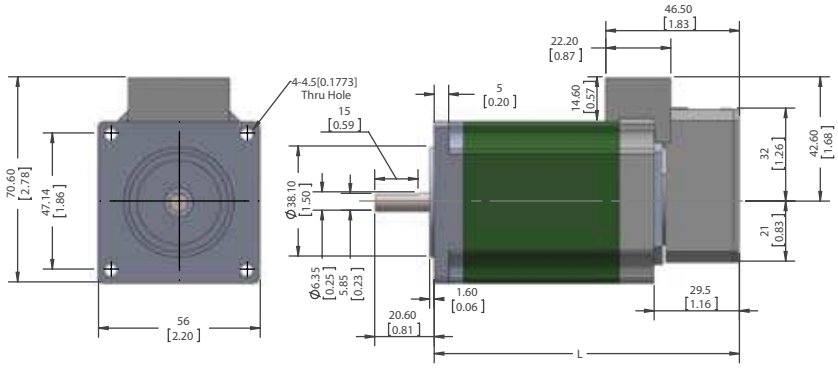

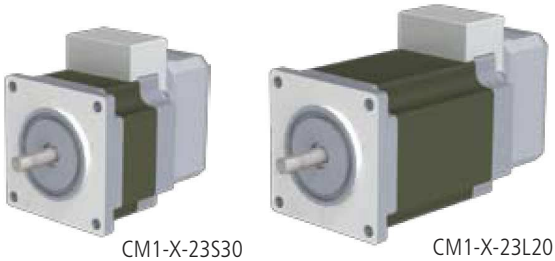

CM1-X-23S30 CM1-X-23L20

■ Torque Curve

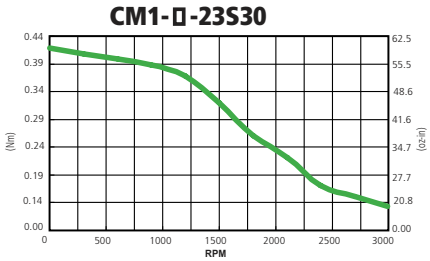

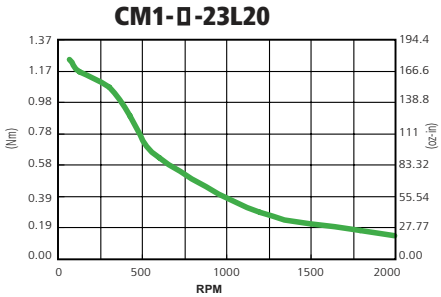

■ Connector Pin Configurations

Motor Cable Receptacle Housing 51065-1200 (Molex)

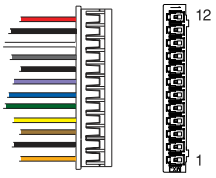

No	Wire Color	Function
1	Orange	+24Vdc
2	Black	Power Ground
3	Brown	Input 2-
4	Yellow	Output 2
5	Green	Output 1
6	Blue	Input 4
7	Violet	Input 3
8	Black	Input 1-
9	Grey	Input 2+
10	White	Input 1-
11	Black	Signal 5Vdc Ground
12	Red	+5Vdc Ouput

■ Connection Example

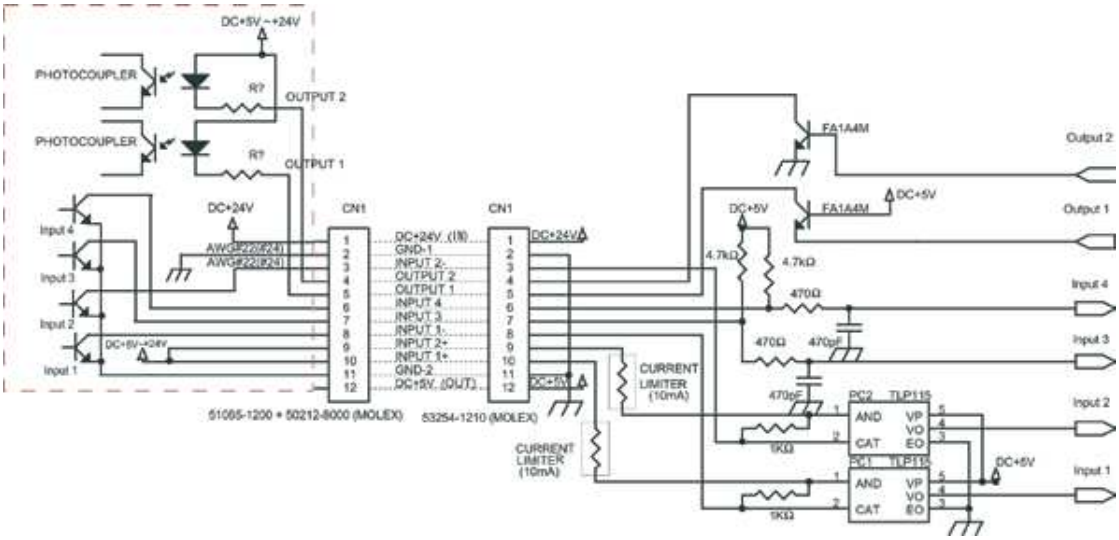

CM2 SPECIFICATIONS

■ Model Name

CM2 - C - 56B 20A - R

- C: Control Type
  - P ... Pulse Type
  - C ... Computer Type
  - R ... Interpolation Type
- 56B: Motor Size
  - 56 ... 56□
  - 60 ... 60□
- 20A: Motor Output
  - 10 ... 100 W
  - 20 ... 200 W
- R: Shaft end
  - R ... Round shaft
  - K ... Keyway
  - D ... D-cut
  - W ... Double D-cut

■ Specifications

MODEL		CM2-□-56B10A	CM2-□-56B20A	CM2-□-60B10A	CM2-□-60B40A
Input AC Voltage [V]		Single-phase or Three-phase 100 - 240 ± 10% (Frequency : 50/60Hz±5%)	Single-phase or Three-phase AC200 - 240 ± 10% (Frequency: 50/60Hz ± 5%)	Single-phase or Three-phase 100 - 240 ± 10% (Frequency : 50/60Hz±5%)	Single-phase or Three-phase AC200 - 240 ± 10% (Frequency: 50/60Hz ± 5%)
Peak Current[Arms]		3.5			
Rated Current[Arms]		0.6			
Motor Output[W]		100	200	100	400
Rated Speed [min^{-1}]		5,000	6,000	3,000	3,500
Max. Speed [min^{-1}]		8,000	8,000	5,000	5,000
Rated Torque[N-m] (kgf-cm)		0.19 (1.95)	0.32(3.25)	0.32 (3.25)	1.09 (11.1)
Max.Torque[N-m] (kgf-cm)		0.57 (5.85)	1.15 (11.7)	0.95 (9.7)	3.82 (39)
Rotor Inertia Moment (kg- m^2)		0.091×10^{-4}	0.18×10^{-4}	0.09×10^{-4}	0.34×10^{-4}
Allowable Inertia Moment of Load		Less than 10 times of Rotor Inertia			
Allowable Radial Load[N-m] (kgf-cm) 20mm off from the mounting surface		58.8(6)	58.8(6)	78.4(8)	196(20)
Allowable Thrust Load[N-m] (kgf-cm)		29.4(3)	29.4(3)	39.2(4)	68.6(7)
Encoder		Incremental Magnetic Encoder			
Resolution (ppr)		From 200 to 50,000 set by parameter			
Control Method		Closed Loop Sinusoidal Vector Control			
Memory Capacity		Number of Program banks / Ladder Logic banks : Each up to 30			
		Number of Commands : Up to 1000			
		Number of data : Position 200/ Speed 15/Acceleration 8/Timer 8/Torque limit 8/General variable 15			
Protective Functions		Position error overflow, over voltage, overload, temperature error, push motion error, emergency stop			
I/O	Control Input	Digital Input : 6 (including pulse Input 2), Analog Input : 1			
	Control Output	Digital Output : 4, Analog Output : 1			
	Communication port	Host and Slave communications 2 port. Conforming to RS-232C.			
Cooling Method		Passive Air Cooled			
Mass[kg]		1.2	1.7	1.1	1.8
Environment	Operating Temperature	0 - +40°C (non-freezing)			
	Storage Temperature	-20 - +60°C (non-freezing)			
	Operating/ Storage Humidity	90% relative humidity or less (non-freezing, non-condensing)			
	Atmosphere	Indoor use only (no direct sunlight). No corrosive gas, inflammable gas, oil or dust.			
	Altitude	1,000m above sea level or lower			
	Shock	10G (98m/s^2) or less			
	Vibration	1G (9.8m/s^2) or less			

CM2 SPECIFICATIONS

■ I/O Specifications

Operating free-air temperature Ta is 25°C (unless otherwise noted)

	ITEMS	CONDITIONS	MIN.	TYP.	MAX.	UNIT
Digital Input 1 (IN1+ - IN1-/IN2+ - IN2-) *1	Applied voltage	IN1+ - IN1-, IN2+ - IN2-	0	-	24	V
	Lower-level input voltage		0	-	0.8	
	High-level input voltage		3	-	24	
	Pulse input frequency		-	-	500	KHz
	Input pulse width		0.8	-	-	μ s
	Input pulse rise/fall time		-	-	0.1	μ s
Digital Input 2 (IN3,4,5,6/INCOM) *2	Applied voltage	IN3,4,5,6 - INCOM	0	-	24	V
	Low-level input voltage		0	-	0.8	
	High-level input voltage		3	-	24	
Analog Input (ANALOG IN)	Input voltage	ANALOG IN - GND	0	-	5	V
	Operating voltage	Position control or Speed control (one direction)	0.2	-	4.8	
		Torque control or Torque feedback control	0.2	-	4.8	
		Speed control (CW direction)	2.6	-	4.8	
		Speed control (CCW direction)	0.2	-	2.4	
Digital Output (OUT1,2,3,4/OUTCOM) *3	Withstand voltage	OUT1,2,3,4 - OUTCOM	-	-	30	V
	Continuous load current		-	-	20	mA
	OFF AE Leak current		-	0.1	1	nA
Analog Output (ANALOG OUT)	Output voltage	ANALOG OUT - GND	1	-	4	V
	Output current		-	-	7	mA
+5V Output (+5VOUT)	Output voltage	+5V - GND	4.5	5	5.5	V
	Output current		-	-	200	mA
Communitaion Line (RXD0/TXD0) (RXD1/TXD1)	Baud rate		9.6	-	230.4	Kbps
	Input voltage	RXD0,RXD1 - GND	-25	-	25	V
	Positive-going input threshold voltage		-	1.8	2.4	
	Negative-going input threshold voltage		0.8	1.5	-	
	Input resistance		3	5	7	KΩ
	Output voltage (MAX)	TXD0,TXD1 - GND	-13.2	-	13.2	V
	Output voltage swing range		±5	±5.4	-	

*1 The polarity of input voltage for IN1+(IN2+) is plus(+) to IN1-(IN2-).
As each input (IN1-, IN2-) is equipped with current regulative diode, the input current can be 8 - 12 mA.
*2 Plus or minus polarity is acceptable for the input voltage between IN3,4,5,6 and INCOM.
Each input (IN3,4,5,6) is equipped with resistor 10KΩ in series.
*3 Plus or minus polarity is acceptable for the applied voltage between OUT1,2,3,4 and OUTCOM.
Each output (OUT1,2,3,4) is equipped with resistor 1KΩ in series.

CM2 SPECIFICATIONS

■ I/O Specifications

Operating free-air temperature Ta is 25°C (unless otherwise noted)

	ITEMS	CONDITIONS	MIN.	TYP.	MAX.	UNIT
Digital Input 1 (IN1+ - IN1-/IN2+ - IN2-) *1	Applied voltage	IN1+ - IN1-, IN2+ - IN2-	0	-	24	V
	Lower-level input voltage		0	-	0.8	
	High-level input voltage		3	-	24	
	Pulse input frequency		-	-	500	KHz
	Input pulse width		0.8	-	-	μ s
	Input pulse rise/fall time		-	-	0.1	μ s
Digital Input 2 (IN3,4,5,6/INCOM) *2	Applied voltage	IN3,4,5,6 - INCOM	0	-	24	V
	Low-level input voltage		0	-	0.8	
	High-level input voltage		3	-	24	
Analog Input (ANALOG IN)	Input voltage	ANALOG IN - GND	0	-	5	V
	Operating voltage	Position control or Speed control (one direction)	0.2	-	4.8	
		Torque control or Torque feedback control	0.2	-	4.8	
		Speed control (CW direction)	2.6	-	4.8	
		Speed control (CCW direction)	0.2	-	2.4	
Digital Output (OUT1,2,3,4/OUTCOM) *3	Withstand voltage	OUT1,2,3,4 - OUTCOM	-	-	30	V
	Continuous load current		-	-	20	mA
	OFF AE Leak current		-	0.1	1	nA
Analog Output (ANALOG OUT)	Output voltage	ANALOG OUT - GND	1	-	4	V
	Output current		-	-	7	mA
+5V Output (+5VOUT)	Output voltage	+5V - GND	4.5	5	5.5	V
	Output current		-	-	200	mA
Communitaion Line (RXD0/TXD0) (RXD1/TXD1)	Baud rate		9.6	-	230.4	Kbps
	Input voltage	RXD0,RXD1 - GND	-25	-	25	V
	Positive-going input threshold voltage		-	1.8	2.4	
	Negative-going input threshold voltage		0.8	1.5	-	
	Input resistance		3	5	7	KΩ
	Output voltage (MAX)	TXD0,TXD1 - GND	-13.2	-	13.2	V
	Output voltage swing range		±5	±5.4	-	

*1 The polarity of input voltage for IN1+(IN2+) is plus(+) to IN1-(IN2-).
As each input (IN1-, IN2-) is equipped with current regulative diode, the input current can be 8 - 12 mA.
*2 Plus or minus polarity is acceptable for the input voltage between IN3,4,5,6 and INCOM.
Each input (IN3,4,5,6) is equipped with resistor 10KΩ in series.
*3 Plus or minus polarity is acceptable for the applied voltage between OUT1,2,3,4 and OUTCOM.
Each output (OUT1,2,3,4) is equipped with resistor 1KΩ in series.

CM2 SPECIFICATIONS

Signal Arrangements

Connector						
Name			Function			
Power Supply Connector		1	R / L1	3 phase AC input / Single phase AC		
		2	S	3 phase AC input		
		3	T / L2	3 phase AC input / Single phase AC		
		4	E	Protective Earth		
Communication Connector	Host Connector	1	RXD0	RS-232C Receive Data from Host		
		2	TXD0	RS-232C Transmit Data from Host		
		3	GND	Communication GND		
	Slave Connector	1	TXD1	RS-232C Transmit Data to Slave		
		2	RXD1	RS-232C Receive Data to Slave		
		3	GND	Signal GND		
I/O Connector		1	+5V	+5V Output (0.2A max)		
		2	INPUT1+	Digital Input1+	CW+	pulse+
		3	INPUT1-	Digital Input1-	CW-	pulse+
		4	INPUT2+	Digital Input2+	CCW+	Direction+
		5	INPUT2-	Digital Input2-	CCW-	Direction-
		6	INPUT3	Digital Input3		
		7	INPUT4	Digital Input4		
		8	INPUT5	Digital Input5		
		9	INPUT6	Digital Input6		
		10	INPUT COM	Common for Digital Input3,4,5,6		
		11	OUTPUT1	Digital Output1		
		12	OUTPUT2	Digital Output2		
		13	OUTPUT3	Digital Output3		
		14	OUTPUT4	Digital Output4		
		15	OUTPUT COM	Common for Digital Output1,2,3,4		
		16	ANALOG IN	Analog Input		
		17	ANALOG OUT	Analog Output		
		18	N.C.	-		
		19	GND	Signal Ground		
		20	GND	Signal Ground		

Cable Option

- Serial Communications Cable
  CM2RS2-2000W: DB9, 2m, RS232
- I/O Cable
  CM2IO2-2000S: 20 wire, 2m, all I/O
- Power Cable
  CM2PW2-2000S: 1 or 3 phase power
- Daisy Chain Network Cable
  CM2DC2-2000W: motor to motor network
- USB Communications Cable
  CM2US2-1800W: USB, 1.8m

Cable Part Description

CM2RS2 - 2000W

CM2 motor | RS232 | Length in mm | S Single ended / W Double ended

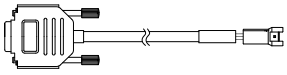

CM2IO2 - 2000S

I/O

CM2PW2 - 2000S

Power

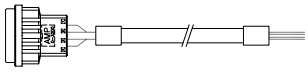

CM2DC2 - 2000W

Daisy Chain Network

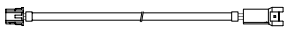

CM2US2 - 1800W

CM2 motor | USB | Length in mm | W Double ended

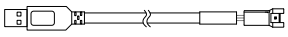

Cable	Interface	Max. Length	Connector	# of Conductors	AWG
CM2US2	USB	1.8m	JST XARR-03VF / USB	4	26
CM2IO2	I/O	5m	JST XADR-20V	20	26
CM2RS2	RS-232	5m	JST XARR-03VF / DB9 F	3	26
CM2PW2	Power	5m	AMP 1-179552-4	4	18
CM2DC2	Daisy Chain	5m	JST XAP-03V-1 / XARR-03VF	3	26

CM2 SPECIFICATIONS

Motor Side Connector Pin Configuration

Power Receptacle

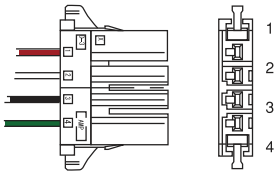

No	Wire Color	Function	
1	Red	R / L1	3 phase AC input / Single phase AC
2	White	S	3 phase AC input
3	Black	T / L2	3 phase AC input / Single phase AC
4	Green	E	Protective Earth

Communications Connectors

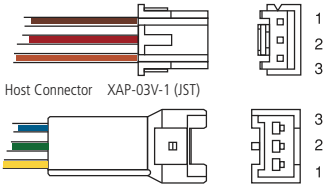

Host Connector XAP-03V-1 (JST)

Secondary Connector XARR-03VF (JST)

No	Wire Color	Function	
1	Brown	RXD	RS-232C Receive Data from Host0
2	Red	TXD0	RS-232C Transmit Data from Host
3	Orange	GND	Communication GND
3	Blue	TXD1	RS-232C Transmit Data to Secondary
2	Green	RXD1	RS-232C Receive Data to Secondary
1	Yellow	GND	Signal GND

I/O Receptacle XADRP-20V (JST)

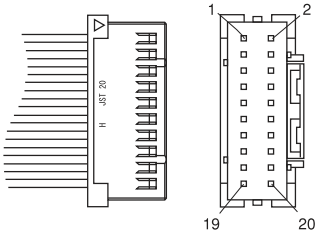

No	Wire Color	Function	No	Wire Color	Function
1 Brown	+5V	+5V Output (0.2A max)	2 Red	INPUT1+	Digital Input1+ / Step+
3 Orange	INPUT1-	Digital Input1- / Step-	4 Yellow	INPUT2+	Digital Input2+ / Direction+
5 Green	INPUT2-	Digital Input2- / Direction-	6 Blue	IINPUT3	Digital Input 3
7 Purple	IINPUT4	Digital Input 4	8 Gray	IINPUT5	Digital Input 5
9 White	INPUT6	Digital Input 6	10 Black	INPUT COM	Common for Input 3,4,5,6
11 Brown	OUTPUT1	Digital Output 1	12 Red	OUTPUT2	Digital Output 2
13 Orange	OUTPUT3	Digital Output 3	14 Yellow	OUTPUT4	Digital Output 4
15 Green	OUTPUT COM	Common for Output1,2,3,4	16 Blue	ANALOG IN	Analog Input
17 Purple	ANALOG OUT	Analog Output	18 Gray		
19 White	GND	Signal Ground	20 Black	GND	Signal Ground

Connection Example

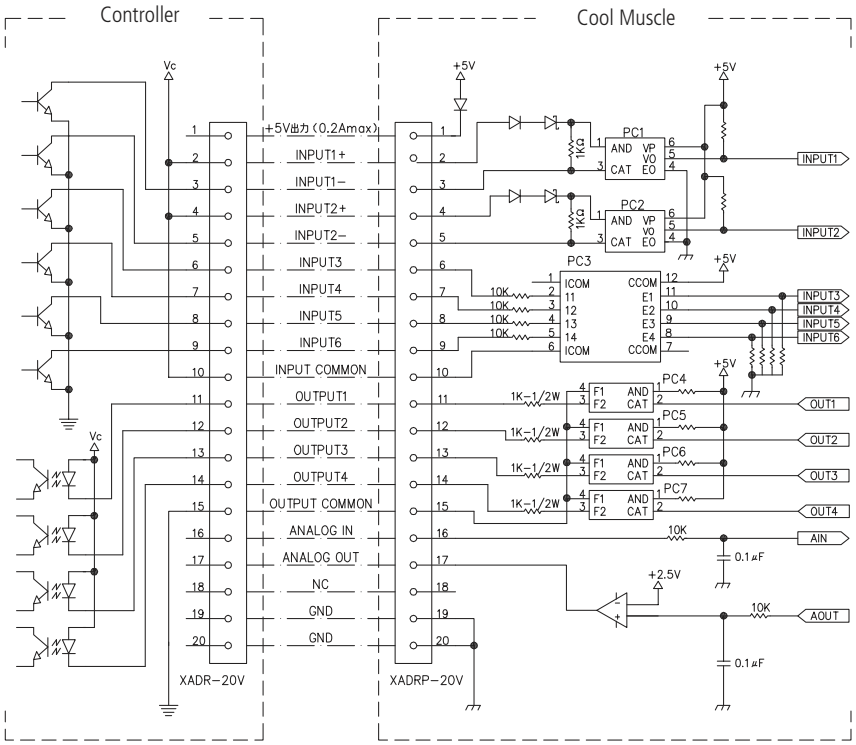

CM2 SPECIFICATIONS

■ CM2 -□ - 56B10A / CM2 - □- 56B20A Dimension UNIT:mm (inch)

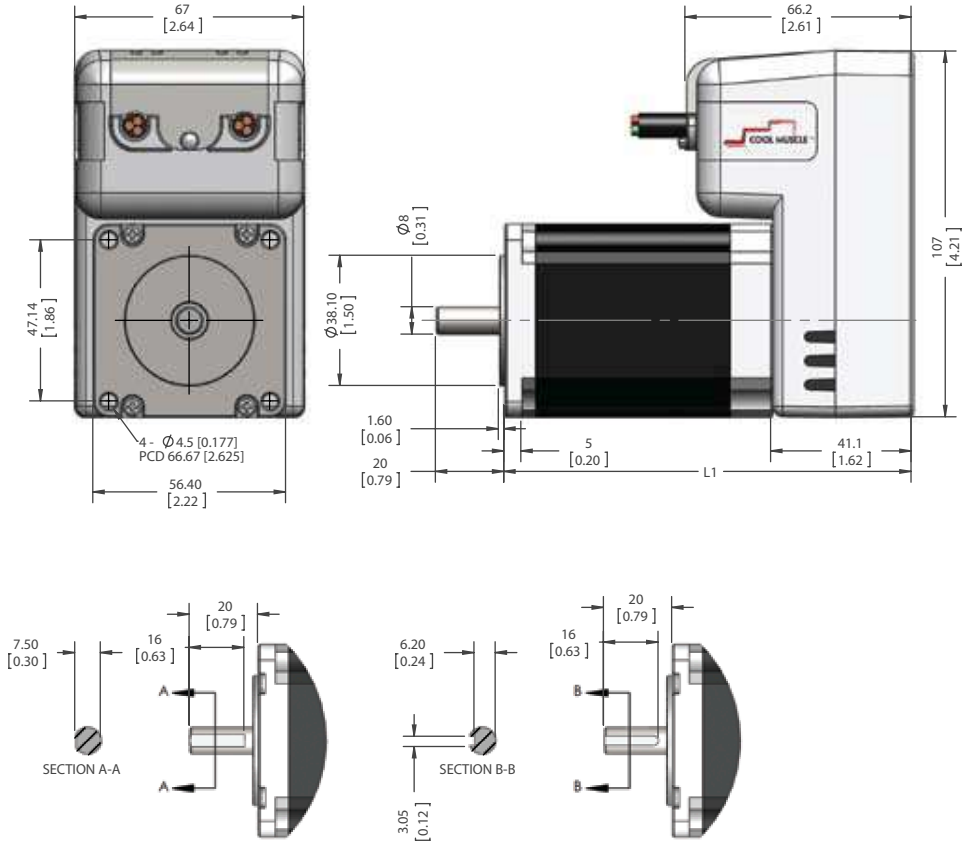

■ Torque Curve

CM2-□-56B10A (100W)

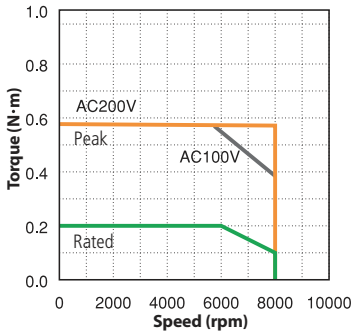

CM2-□-56B20A (200W)

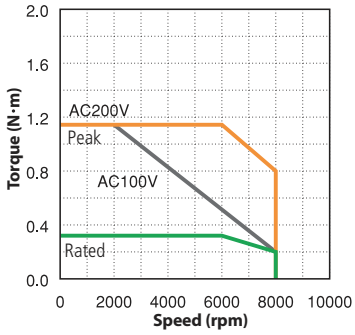

■ Motor Length

Model Name	L1
CM2-□-56B10A	93.2 (3.67)
CM2-□-56B20A	119.2 (46.93)

CM2-□-56B10A

CM2-□-56B20A

The CM2 56 frame size servo system is designed for high speed applications such as rapid traverse systems in pick and place robots. The 56mm frame size is similar to the NEMA 23 standard, but has an 8mmOD shaft to accommodate the higher wattage capabilities of thesse AC servos. Myostat provides shaft couplings, linear actuators, and gearheads matched to this motor system.

CM2 DRAWINGS

■ CM2 - □ - 60A10A / CM2 - □ - 60A40A Dimension UNIT: mm (inch)

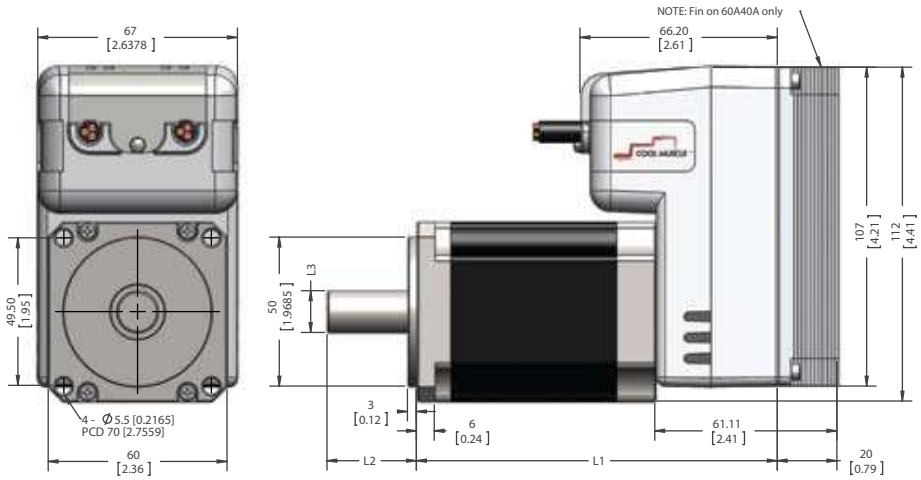

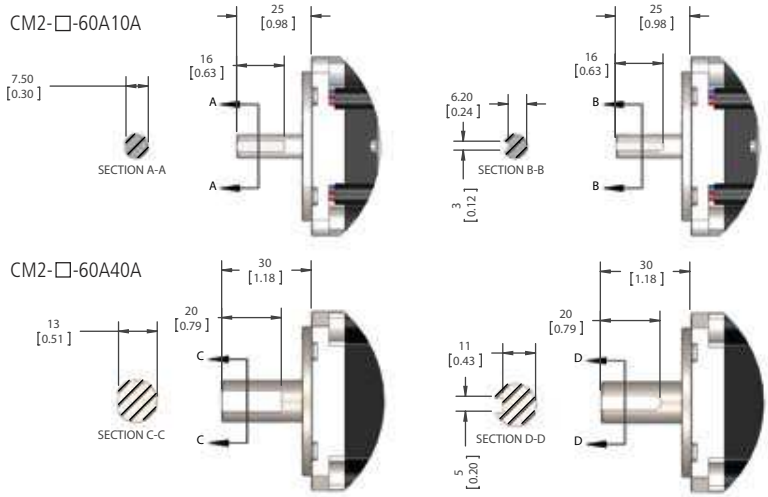

■ Torque Curve

CM2-□-60A10A (100W)

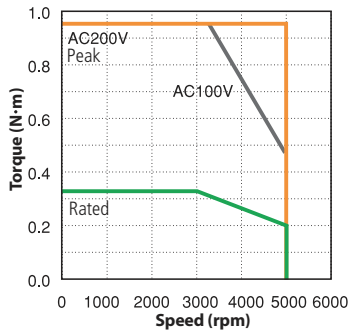

CM2-□-60A40A (400W)

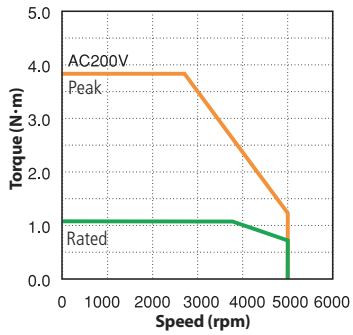

■ Motor Length

Model Name	L1	L2	L3	L4	L5
CM2-□-60A10A	88.1 (3.47)	25 (0.98)	16 (0.63)	7.5 (0.3)	Φ8
CM2-□-60A40A	*141.1 (5.56)	30 (1.18)	20 (0.79)	13 (0.51)	Φ14

* With heat radiation fin

CM2-□-60A10A

CM2-□-60A40A